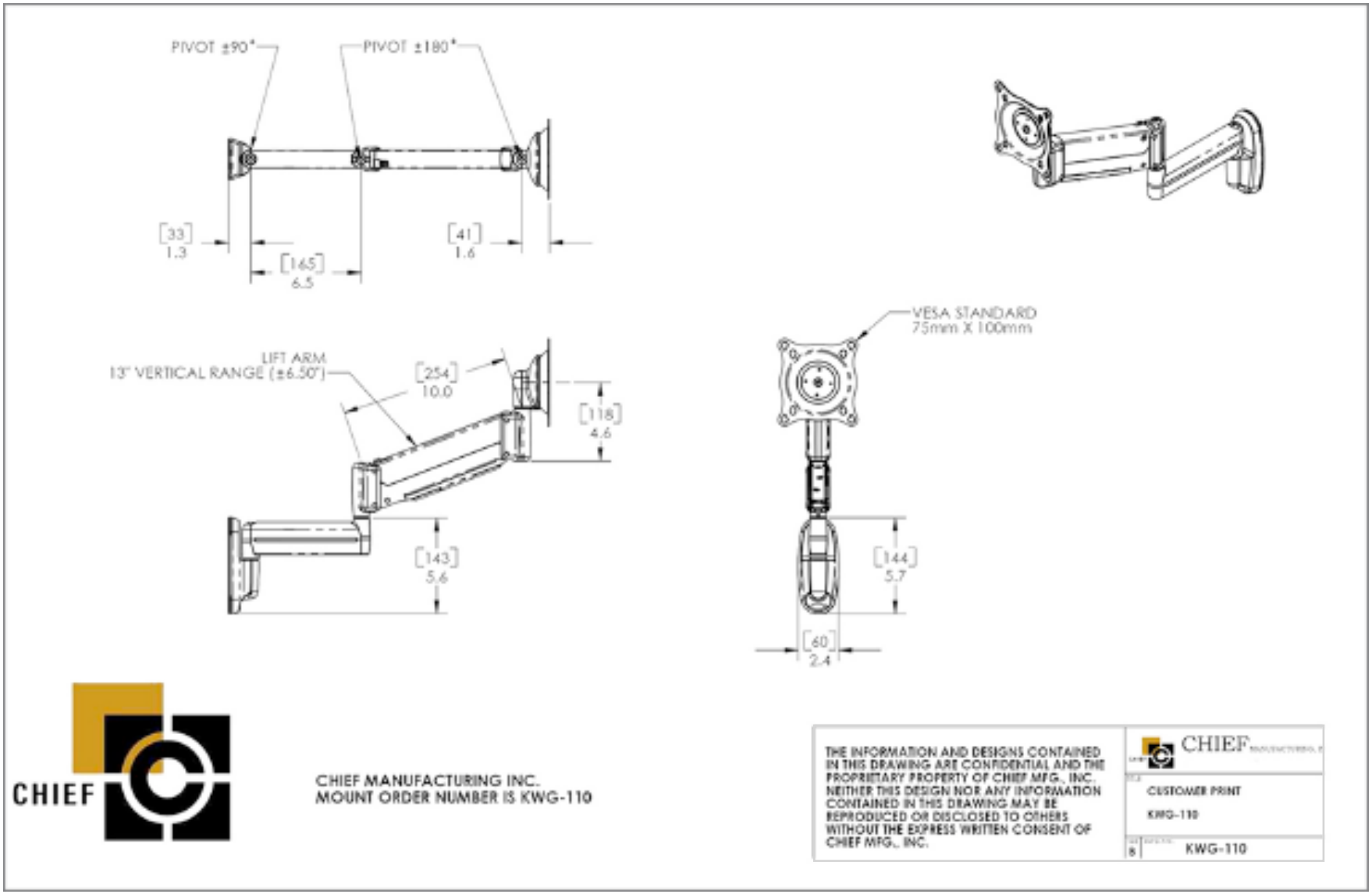

CHIEF KWG110 TECHNICAL DRAWING